OPERATION and MAINTENANCE MANUAL

VPF Visibility Sensors

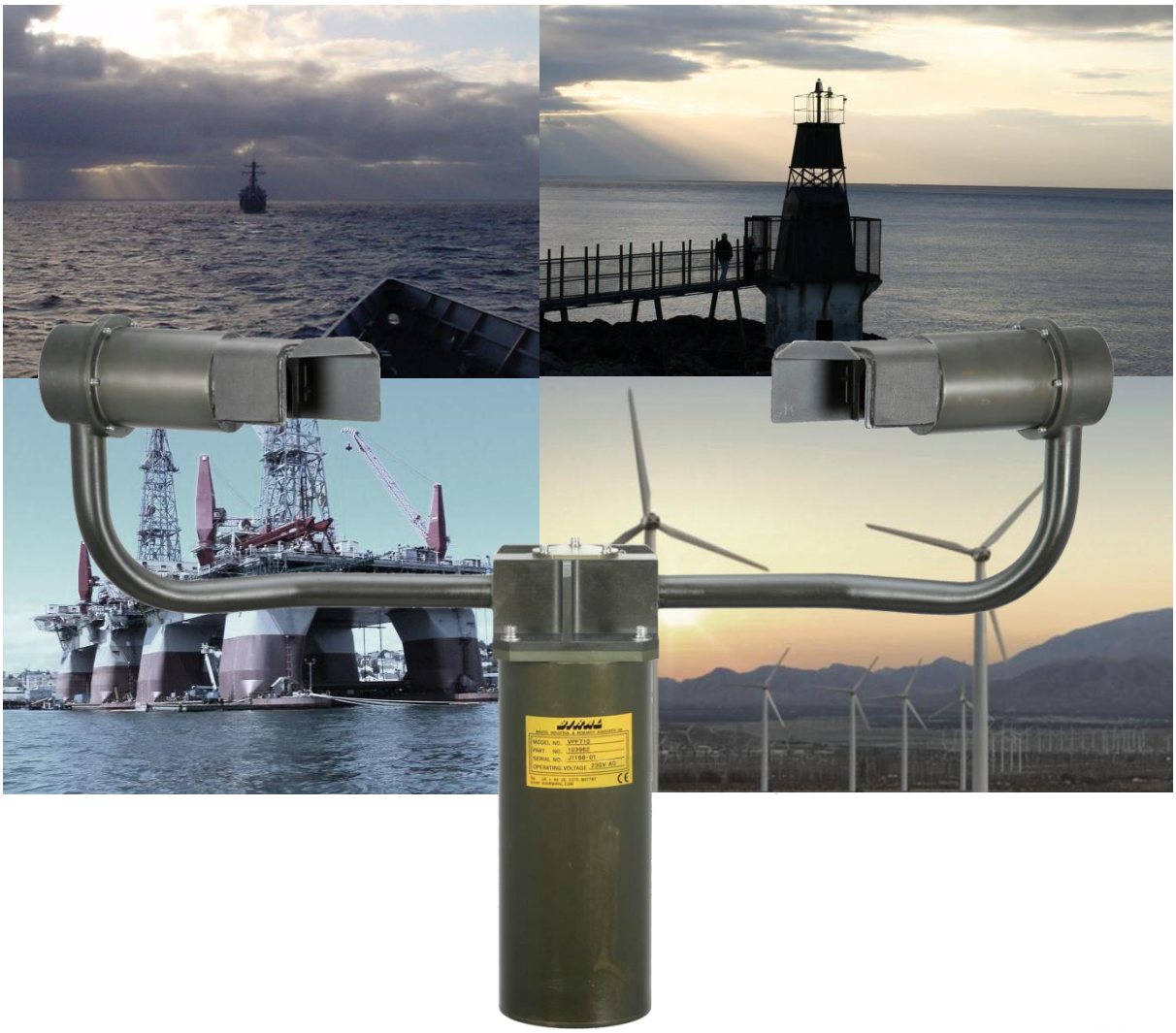

VPF510

PROPRIETARY NOTICE

The information contained in this manual (including all illustrations, drawings, schematics and parts lists) is proprietary to BIRAL. It is provided for the sole purpose of aiding the buyer or user in operating and maintaining the instrument. This information is not to be used for the manufacture or sale of similar items without written permission.

COPYRIGHT NOTICE

No part of this manual may be reproduced without the express permission of BIRAL

© 2013 Bristol Industrial and Research Associates Limited (BIRAL)

Biral – P O Box 2, Portishead, Bristol BS20 7JB, UK

Tel: +44 (0)1275 847787

Fax: +44 (0)1275 847303

Email: info@biral.com

www.biral.com

Manual Number: 106320

Revision: 00C

CONTENTS

GENERAL INFORMATION

Manual version i
Contents ii
Figures iii
Tables iii
The sensors covered in this manual iv
Features of the HSS sensors v
Customer satisfaction and After Sales Support vi
Contacting Biral vi
Five year warranty vii
If you need to return the sensor vii
CE Certification – Safety vii

1 SENSOR SET-UP 1

1.1 STEP 1 - Unpacking the sensor 2
1.2 STEP 2 - Electrical Connections 4
1.3 STEP 3 - Equipment Test 7
1.4 STEP 4 - Configuration Options 10
1.5 STEP 5 - Installation 27
1.6 STEP 6 - Test and Commissioning 31

2 STANDARD OPERATING DATA 34

2.1 Data Output Message VPF510 35

3 COMMANDS AND RESPONSES 37

3.1 Sensor Commands 37
3.2 Sensor Responses 41

4 MAINTENANCE PROCEDURES 42

4.1 General Checks 42
4.2 Self-Test Codes 43
4.3 User Confidence Checks 45

5 CALIBRATION PROCEDURES 47

5.1 Calibration Check 47
5.2 Sensor Re-calibration 50

6 PRODUCT OVERVIEW 52

6.1 VPF500 Series of Present Weather Sensors 52
6.2 Sensor Features 53
6.3 Sensor Specifications 55
6.4 VPF500 Series of Sensors - Dimensions 61

7 INDEX 62

8 NOTES: 66

FIGURES

Figure 1-1 - VPF510 in its packaging 2
Figure 1-2 - VPF510 Orientation 28
Figure 1-3 - U-Bolt Mounting Method.....29
Figure 5-1 - Assembly of Calibration Reference Plaque.....48
Figure 6-1 - VPF510 Model Dimensions (mm) 61

TABLES

Table 1-1 - AC Power Connections.....4
Table 1-2 - DC Power Connections.....5
Table 1-3 - RS232 Signal Connections 5
Table 1-4 - RS422/485 Signal Connections 6
Table 1-5 - Analogue Signal Connections.....6
Table 1-6 - Relay Connections 7
Table 1-7 - Options Word (lower byte).....11
Table 1-8 - Operating State Word (lower byte).....13
Table 1-9 - Baud-Rate Configuration.....17
Table 1-10 - Relay configuration 22
Table 1-11 - Recommended Sensor Height Above Ground.....28
Table 1-12 - Remote Self-Test and Monitoring Message Fields.....32
Table 2-1 - VPF510 Data Massage to Output MOR 35
Table 2-2 - VPF510 Data Massage to Output Exco 36
Table 3-1 - Commands for VPF500 Series of Sensors.....39
Table 3-2 - Command R? Response.....40
Table 3-3 - Command T? Response 41
Table 3-4 - Responses From Sensor.....41
Table 6-1 - Measurement Capabilities of the VPF500 Series of Sensors.....55
Table 6-2 - Instrument Characteristics 58
Table 6-3 - Digital Communication Interface Specifications.....59

General Information

The sensors covered in this manual :

Sensor Model	Capability
VPF510	Visibility Digital output Analogue output Relay outputs – programmable for visibility

PATENT COVERAGE

The Present Weather Measurement Techniques are protected by the following Patents.

U.S. Patent No.	4,613,938
Canadian Patent No.	1,229,240
German Patent No.	3,590,723

CE

RoHS Compliant

Thank you for choosing Biral as your supplier of Visibility Sensors

A great deal of time has been invested at Biral to offer the best combination of sensor performance and value and almost three decades of experience and knowledge have been incorporated into the HSS Sensors. We are confident that they will provide you with many years of reliable, accurate operation.

Features of the HSS Sensors:

- **Full date/time stamp in data string** provided by the real time on-board clock.

- **Flexibility to connect to a wide range of data collection/processing units** with a choice of RS232, RS422 or RS485 serial digital outputs.

- **Analogue outputs provided for direct indication of visibility** with a choice of voltage or current outputs.

- **Two volts-free relay outputs provided for direct control of ancillary circuits** programmable for visibility set point, or one may be used to flag window contamination.

- **One volts-free fault relay output provided** for fault state indication to ancillary circuits.

- **Easy installation** due to its light weight and small footprint**.**

Customer Satisfaction

At Biral we set our standards high and only your complete satisfaction is acceptable to us. If you believe your experience has not met these standards we would be grateful if you would contact us so we can rectify any issues you may have (equally, if you have any positive experiences you would like to share).

After Sales Support

Biral offers support by telephone and email for the lifetime of these sensors, even if there has been a change of ownership, so please get in touch if you require help. Similarly, if you have any questions about your new equipment we are only a mouse-click or telephone call away. Our contact details are given below.

(NB For your convenience our contact details are also on the label fixed to your sensor).

Contacting Biral

If you would like technical assistance, advice or you have any queries regarding the operation of the sensor please do not hesitate to contact us.

For enquiries and technical support:

Contact us by telephone on:	+ 44 (0)1275 847787
Contact us by fax on:	+ 44 (0)1275 847303
Contact us by e-mail at:	service@biral.com

Five year warranty

The HSS Visibility Sensors come with a five year limited warranty against defective materials and workmanship. If you have any questions about the warranty please contact Biral.

In order to help us to assist you please be sure to include the following information:

- Model of equipment
- Serial number of equipment
- Nature of defect
- Data Output Strings
- Responses to R? command
- Relevant application details
- Your full name, address and contact details

If you need to return the sensor

The HSS sensors should give you many years of trouble-free service but in the unlikely event that the equipment proves to be faulty and we have asked you to return the sensor to us please address the equipment to:

BIRAL
Unit 8 Harbour Road Trading Estate
Portishead
Bristol BS20 7BL
UNITED KINGDOM

The customer is responsible for the shipping costs.

CE Certification - Safety

All Biral's HSS sensors comply with the requirements for CE marking. Once installed, it is the user's responsibility to ensure that all connections made to the sensor comply with all Local and National safety requirements.

In order for the mains version of any sensor to comply with the requirements of EN 61010-1:2010, 'Safety requirements for electrical equipment for measurement, control, and laboratory use', the following should be observed:

A switch or circuit breaker must be included in the installation. This switch or circuit breaker must be suitably located and easily reached. It must be marked as the disconnecting device for this equipment.

1 SENSOR SET-UP

The format of this section is such that it logically follows these recommended procedural steps:

Step 1 - Unpack equipment and ensure that all required parts are supplied and identified.

Step 2 - Make electrical connection as required for testing and configuration.

Step 3 - Power up and test equipment on bench.

Step 4 - Configure equipment as required for site installation.

Step 5 - Installation including siting considerations, height, orientation, mounting and electrical grounding.

Step 6 - Carry out commissioning test procedure.

NOTE: Many of the tests specified within this manual require the use of a PC or equivalent. To achieve the two-way serial communication required, Biral recommends the use of a PC running the Biral Sensor Interface Software. If this software is not available, use a terminal program - for example Windows® Hyper Terminal™. The Biral Sensor Interface Software is available by contacting Biral at: Info@Biral.com.

1.1 STEP 1 - Unpacking the sensor

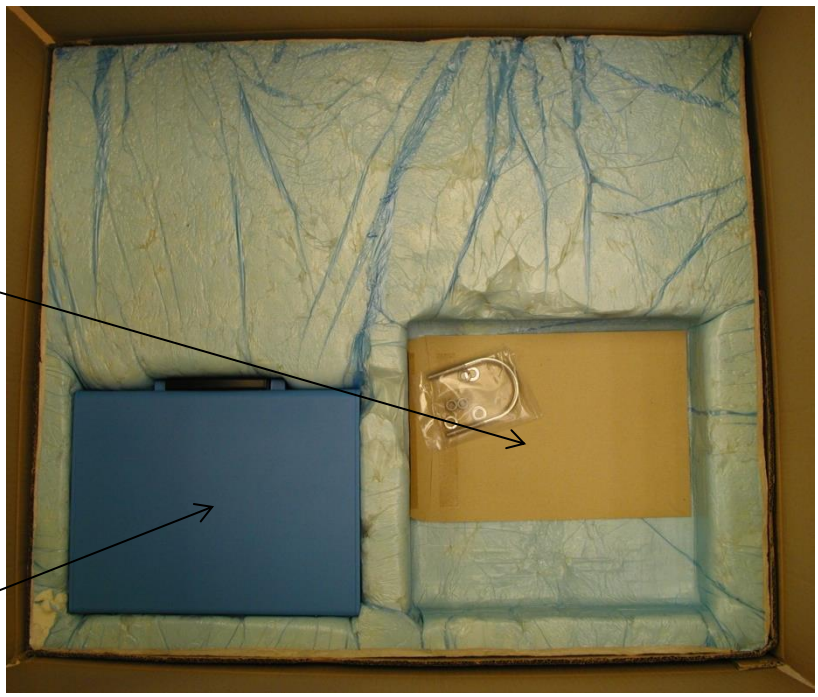

Top Layer

Bottom Layer

Figure 1-1 - VPF510 in its packaging

Other optional components you may have ordered:

Calibration Kit

The calibration kit is supplied in a protective carrying case, containing: a calibration screen and mounting (referred to as the calibration reference plaque when assembled) and 2 x grey foam plugs (these are the ZERO PLUGS referred to in the calibration sections).

Transit Case

A rigid re-usable transit case designed to provide full protection to the instrument for **regular** shipping. Please note if this is not ordered the sensor is shipped in the standard rugged foam filled box as shown in Figure 1-1 – VPF510 in its packaging.

1.2 STEP 2 - Electrical Connections

All electrical connections should be completed before applying power to the sensor.

1.2.1 Cables

The VPF500 series of sensors are supplied with all necessary cables permanently attached via cable glands. Generally four cables are provided, one for power, one for serial data, one for the analogue data and one for the three relays. This relay cable provides the connections for the fault relay (NO contact, energised when in the no fault state) and the two visibility relays which have single pole changeover contacts. These cables are supplied in a standard length of 6m. Any other length up to 25m can be supplied as an option if specified at time of order.

Note: For RS232 data configuration, cable lengths above 6m may not work reliably at high baud rates. It is strongly recommended that baud rates no higher than 4800 are used for cable lengths up to 25m.

The cables are terminated with tinned tails for user connections. The power and data cables are colour coded, as specified in the following paragraphs. The relay cable has a single green/yellow core which provides the protective earth connection. The remaining 8 cores are black with numbers stamped on each core at regular intervals down the cable length.

1.2.2 Power Input Cable

The 3 core power cable furnished with the sensor has the following pin and conductor assignments:

110 and 230VAC Models

Conductor Colour	Function
Brown	AC Live
Blue	AC Neutral
Yellow/Green	Sensor Ground

Table 1-1 - AC Power Connections

12 and 24VDC Models

Conductor Colour	Function
Brown	12V DC or 24V DC
Blue	0V
Yellow/Green	Sensor Ground

Table 1-2 - DC Power Connections

1.2.3 Digital Data Connections

RS232 Signal Connections

When operating in the RS232 interface mode, the output signal cable furnished with the sensor has the following conductor assignments. The cable consists of 3 sets of twisted pairs. The Function data refers to the SENSOR function.

Pair Number	Conductor Colour	Function
1	Red	Tx Data
1	White	Not Used
2	Brown	Rx Data
2	White	Not Used
3	Grey	Signal Ground
3	White	Sensor Chassis Ground

Table 1-3 - RS232 Signal Connections

RS422/485 Signal Connections

When operating with the RS422 or RS485 interface protocols, the output signal cable furnished with the sensor has the following conductor assignments. The cable consists of 3 sets of twisted pairs. The Function data refers to the SENSOR function.

Pair Number	Conductor Colour	Function
1	Red	Tx+
1	White	Tx-
2	Brown	Rx+
2	White	Rx-
3	Grey	Signal Ground
3	White	Sensor Chassis Ground

Table 1-4 - RS422/485 Signal Connections

1.2.4 Analogue Data Connections

The analogue data is provided via a 3 twisted pair cable, similar to the digital signal connections, but the Red/White pair is not used, and has been cut short on the analogue cable for ease of identification. The conductors are assigned the following functions where O/P Current is for the current loop option. This can be either 4 to 20 mA or 0 to 20 mA, specified at time of order. The respective voltage or current will be proportional to either the visibility (Meteorological Optical Range – MOR), or the Extinction Coefficient (Exco), dependent on the configuration setting (see paragraph 1.4.13).

Pair Number	Conductor Colour	Function
1	Brown	O/P Volts (+)
1	White	O/P Volts (return)
2	Grey	O/P Current (+)
2	White	O/P Current (return)

Table 1-5 - Analogue Signal Connections

1.2.5 Relay Connections

The relay connections are provided via a 9 core cable. This cable has eight black, numbered cores and one green/yellow core. It is rated at 600Vrms and it is 20AWG (10/30), so can be used with 240V AC mains if required. The green/yellow wire is the protective earth connection, from the sensor housing.

The relay connections are as follows:

Conductor Colour	Function
White	Fault Relay N/O
Brown	Fault Relay COM
Yellow	Relay # 1 N/O
Grey	Relay # 1 COM
Pink	Relay # 1 NC
Blue	Relay # 2 N/O
Red	Relay # 2 COM
Black	Relay # 2 NC
Green	Protective Earth

Table 1-6 - Relay Connections

1.3 STEP 3 - Equipment Test

Biral recommends that the equipment is powered and checked on the bench before site installation. This is to ensure that you are comfortable with the functionality of the sensor and to pre-empt any queries that arise before attempting site installation.

Note: this procedure assumes a default configuration for the sensor - please check the Calibration Certificate supplied with your sensor for specific configuration details.

NOTE: In this test, and in all subsequent sections of this manual, the following convention MUST be observed:
ALL COMMANDS SHOULD BE TERMINATED WITH <CARRIAGE RETURN> AND <LINE FEED> (ASCII CHARACTERS 13 AND 10). In this manual this is normally abbreviated to <CRLF>.

1.3.1 Equipment Test Procedure

To enable the configuration setting to be checked and adjusted if necessary, it is recommended that these initial tests are carried out using the digital communication system. If it is only intended to use the analogue signals and the relays, these can be checked by following the instructions in Paragraphs 1.2.4 Analogue Data Connections and 1.2.5 Relay Connections.

1.3.2 Digital Communication checks

1. Connect the power-input cable to a local power source (do not turn power source on). Connect sensor earth lug to earth (this may not be necessary but can help prevent communication errors with certain PCs).

2. Connect the digital signal cable to a PC running the Biral Sensor Interface Software. If this is not available, use a terminal program - for example Windows® Hyper Terminal™. (For RS422/485 sensors a RS422 to RS232 converter must be used).
   Note: Biral recommends testing to be done with RS232 or RS422 as applicable. When you are confident that the sensor is working it can then be set up for RS485 if required.

3. Configure the terminal program, either Biral Sensor Interface Software or Hyper Terminal as follows:

   Default Interface Parameters

   Baud Rate 9600
   Data Bits 8
   Stop Bits 1
   Parity ..... None
   Flow Control ..... None

   (If using Hyper Terminal the options 'Send line ends with line feeds' and 'Echo typed characters locally' in ASCII set up should be checked.)

4. Turn the local power source "ON".

   If communications are working the sensor will respond with “Biral Sensor Startup”.

5. Check Data Transmission To Sensor:

   Send the command R? from the PC terminal to the sensor:

   The sensor will respond with its Remote Self-Test & Monitoring Message.
   For example:
   100,2.509,24.1,12.3,5.01,12.5,00.00,00.00,100,105,107,00,00,00,+021.0,4063

6. Check Data Transmission From Sensor:

If the sensor is NOT in polled mode:
Wait for the sensor to transmit a Data Message (approx. 80 seconds from power up).

If the sensor is in polled mode:
Send the command D? from the PC terminal to the sensor:
A Data Message will be transmitted immediately.

7. EXCO Calibration check:

THIS PROCEDURE CAN ONLY BE COMPLETED IF A SUITABLE HSS SERIES CALIBRATION KIT AND PC ARE AVAILABLE

Carry out the calibration check procedure in paragraph 5.1, page 47 to ensure that the EXCO value changes i.e. the sensor responds to changes in visibility.

NOTE: As this calibration check is being carried out indoors the EXCO value may NOT agree with that marked on your calibration reference plaque.

NB The sensor is fully calibrated before it leaves Biral.

1.3.3 Analogue Signal Checks

1. Connect the power-input cable to a local power source (do not turn power source on). Connect sensor earth lug to earth (this may not be necessary but can help prevent communication errors with certain PCs).

2. Connect the analogue signal cable to a multimeter, set to read volts or current as appropriate. Switch on the power source.

3. The actual reading achieved depends on whether the output is set to register MOR or Exco, and what the maximum range setting is. Refer to Section 1.4 for instructions for setting the output configurations.

4. As a quick check, assuming that the output is set to register MOR (default), when the transmitter is blocked using the zero plugs from the calibration kit if available, the reading should be approximately 10V. If the instrument is set to output Exco, the reading should

be approximately zero. With the transmitter un-blocked, moving a sheet of white paper towards the measurement volume from the front of the instrument simulates reduced visibility. The voltage (current) reading for MOR should drop. If the output is set to register Exco, the reading should increase.

1.3.4 Relay Checks

A full explanation of the relay operation can be found in Section 1.4. The following instructions provide a quick check on the relay operation to confirm correct performance.

1. Connect the power-input cable to a local power source (do not turn power source on). Connect sensor earth lug to earth (this may not be necessary but can help prevent communication errors with certain PCs).

2. For a quick check of relay operation, it is assumed that the various customer selectable parameters are initially set to their default values.

3. Connect the relay signal cable to a multimeter, set to read ohms, or continuity. Connect between cores # 3 and # 4.

4. When the transmitter is blocked using the zero plugs from the calibration kit if available, the reading should be high ohms (open circuit). With the transmitter un-blocked, hold an A3 sheet of white paper just above the two hoods, roughly horizontal. This simulates a very low visibility. This should be maintained for 4 minutes, when the relay # 1 should switch on, reducing the reading on the meter to near zero ohms (short circuit). This time delay is the default delay between the visibility reducing below threshold and the operation of the relay.

5. Remove the sheet of white paper and block the transmitter. The relay should switch off after 8 minutes. This is the default delay between achieving good visibility and the removal of the alert state.

1.4 STEP 4 - Configuration Options

Two configuration bytes determine many of the configuration selections which are available for the VPF510 sensors. These two bytes are the lower bytes of the **Options Word** and of the **Operating State Word**. These are described below and their functions are detailed in the remainder of this section.

For both these bytes, the value is entered as a binary number (1's and 0's). Leading 0's in the value need not be entered. The value is stored in non-volatile memory and the operating configuration when power is applied is that set by the last entered options word and operating state word.

1.4.1 Options Word

The binary value of this word can be determined by sending the 'OP?' command.
The response will be as follows:

aaaaaaaa,bbbbbbbb

The upper byte, (aaaaaaaa) is used to set internal operating parameters and should not be changed. It will in general be '00000000'.

Each bit of the lower byte is defined as follows:

b b b b b b b b

Bit 1: 1 - Add Date and Time to the start of the data message.
0 - No Date and Time at the start of the data message.

Bit 2: Not used.

Bit 3: Not used

Bit 4: Not used.

Bit 5: Not used.

Bit 6: 1 - Add a check sum character to all sensor output messages.
0 - Don't add check sum character to all sensor output messages.

Bit 7: 1 - Don't adjust EXCO and MOR values in data messages for measured window contamination.
0 - Adjust EXCO and MOR values in data messages for measured window contamination.

Bit 8: 1 - Use RS485 addressable Communications protocol.
0 - Do not use RS485 addressable Communications protocol.

Table 1-7 - Options Word (lower byte)

To set this word, send command CO to enable changes and then command OPabc0000d to set the Option Word as required, where a, b, c and d can be set to '0' or '1' as required. For example, send OP100000 to enable the checksum with no date and time stamp and not using RS485 (leading '0's are not necessary in this command). A full description is given in Table 1-7:

Bit 1 (Date and Time enable), Bit6 (Check Sum enable), Bit 7 (Adjustment for window contamination disable) and Bit 8 (RS485 enable) are the only bits which may be set to '1'by the user. All other bits MUST be left at '0' for correct sensor operation.

The Default setting = 00000000.

1.4.2 Operating State Word.

The binary value of this word can be determined by sending the 'OS?' command.
The response will be as follows:

aaaaaaaa,bbbbbbbb

The upper byte, (aaaaaaaa) is used to set internal operating parameters and should not be changed. It will in general be '00000000'.

To set this word, send command OSab00c0de to set the Operating State Word as required, where a, b, c, d and e can be set to '0' or '1' as required. For example, send OS1000 to set the hood heaters to always off. A full description is given in Table 1-8:

Bit 1 (standard/polled data message), Bit 2 (data message timing), Bit4 (hood heaters) and Bits 7 and 8 (window heater modes) are the only bits which may be set to '1'by the user. All other bits MUST be left at '0' for correct sensor operation.

Default setting = 00000001.

Each bit of the lower byte is defined as follows:

b b b b b b b b

Bit 1: 1 = Standard Mode: Data message sent automatically after calculation.
0 = Polled Mode: Data message sent only in response to "D?"' command.

Bit 2: 1 = Calculate values and determine data message in response to "D?" command, ignoring measurement interval timing (Bits 1 and 3 must be “0”).
0 = Values calculated and data message determined after each measurement interval.

Bit 3: Reserved.

Bit 4: 0 = Hood Heaters enabled (heaters will turn on if temperature is less than 2°C then off when temperature exceeds 4°C).
1 = Heaters always off.

Bit 5: Reserved.

Bit 6: Reserved.

Bits 7 and 8: Window Heater Control (demisters).
DC powered sensors ONLY (power saving).
(AC Powered sensors should have window heaters on permanently).

00 = Window demisters always on.
01 = Window demisters controlled by window contamination. If any window's attenuation increases, caused by contamination or condensation, to more than the percentage specified by WT command, the heaters will turn on for 300 seconds or until the attenuation is reduced to 4/5 of the turn on threshold.
11 = Window demisters always off.

Table 1-8 - Operating State Word (lower byte)

1.4.3 Changing the Sensor Default Settings

The default setting for the upper byte of both the Options Word and the Operating State Word is ‘00000000’ which should NOT be changed. The default setting for the lower byte of the Options Word is ‘00000000’ and the default setting for the lower byte of the Operating State word is ‘00000001’. The following paragraphs detail the changes to these defaults which can

be undertaken by the user, together with instructions for achieving the required sensor configuration.

PLEASE BE EXTREMELY CAREFUL IN SETTING THE CORRECT BITS IN THE FOLLOWING INSTRUCTIONS AS SETTING THE WRONG BIT WILL RESULT IN THE SENSOR FUNCTIONING INCORRECTLY

Default setting for units WITH hood heaters.

Any combination of bits 7 and 8 of the Operating State Byte may be set but **Biral strongly recommends** that for all sensors the **window demisters are always on** (bits 7 and 8 set to 0). See Table 1-8 - Operating State Word (lower byte).

The default setting of the Operating State Byte is OS00000001 which is:

- window demisters always on.
- hood heaters enabled.
- values calculated and data message sent automatically after each measurement interval.

(To set this operating state, send the command: OS1).

Default setting for units WITHOUT hood heaters.

Any combination of operating bits may be set but **Biral strongly recommends:**

1. For all sensors the **window demisters are always on** (bits 7 and 8 set to 0).
2. For **sensors without hood heaters the heaters are always off** (bit 4 set to 1).
   See Table 1-8 - Operating State Word (lower byte).

The default setting is OS00001001 which is:

- window demisters always on.
- hood heaters disabled.
- values calculated and data message sent automatically after each measurement interval (expanded data message).

(To set this operating state, send the command: OS1001).

Default setting for all sensors running in polled mode

OS00000010 (polled mode).

- window demisters always on.

- hood heaters enabled.
- values calculated and data message determined in response to D? Data message sent only in response to D? command.

  See Table 1-8 - Operating State Word (lower byte).

(To set this operating state, send the command: OS10).

1.4.4 Date and Time Stamp in data string

By default the date and time stamp is not included at the start of the data string. This is controlled by the Options Word setting; see Table 1-7 - Options Word (lower byte).

To enable Date and Time stamp

The sensor can be configured to generate messages with the date and time string by setting the least significant bit in the options word:

Step 1 - Send the command: CO.

Step 2 - Send the command: OP1.

(Note: to enable checksum and time/date-stamp send OP100001).

PLEASE BE EXTREMELY CAREFUL IN SETTING THE CORRECT BIT IN STEP 2 AS SETTING THE WRONG BIT WILL RESULT IN THE SENSOR FUNCTIONING INCORRECTLY

To check the setting of the options word, send the command: OP?

The sensor should respond: 00000000,00000001.

To disable Date and Time stamp

To disable the date and time stamp, send the command OP0 in step 2 above.

To read the current Date and Time

Send the command TR?

The sensor will respond with the date / time message e.g.:

FRIDAY ,23\03\12,13:15:25,000

To set the current Date and Time

There are two commands required to set the current date and time:

%SD sets the real time clock date.

The format of the command is: %SDWDDMMYY

where:

W - is the day of the week (1..7) with Sunday being 7.

DD - is the date (01..31).

MM - is the month (01..12).

YY - is the year (00..99).

The sensor will respond with 'OK'.

%ST sets the real time clock time.

The format of the command is: %STHHMMSS

where:

HH - is the hours in 24 hour clock (00..23).

MM - is the minutes(00..59).

SS - is the seconds (00..59).

The sensor will respond with 'OK'.

1.4.5 Baud Rate Configuration

Default communication parameters are 9600 Baud, 8 data bit, 1 stop bit, no parity, and no flow control. The baud rate may be changed if required as follows.

Send %B(Number)

Just typing %B will bring up the different baud rate options:

SELECT REQUIRED BAUDRATE BY TYPING %B(NUMBER)
1....1200 BAUD
2....2400 BAUD
3....4800 BAUD
4....9600 BAUD
5....19K2 BAUD
6....38K4 BAUD
7....57K6 BAUD

Select the baud rate to use, for example to select 9600 baud the user would type

%B4<CRLF>

The user then receives a prompt to send an "OK" to the sensor at the new baud rate setting. The new setting will only be accepted if the user manages to communicate with the sensor at the new baud rate within 60 seconds. Otherwise the sensor will reset and continue operation with the original baud rate settings. If an "OK" command is received at the new baud rate the sensor will update its settings and restart.

Table 1-9 - Baud-Rate Configuration

1.4.6 Checksum to verify message

A check sum byte can be included with messages sent by the sensor to verify that noise in the communications link has not changed the message. Generally noise is not a problem and checksum verification is not required. This is controlled by the Options Word setting; see Table 1-7 - Options Word (lower byte).

Note: if RS485 communications are selected then this checksum is not used.

By default the sensor is configured at the factory with checksum DISABLED.

To enable checksum

The sensor can be configured to generate messages with a check sum byte by setting the sixth bit in the options word:

Step 1 - Send the command: CO.
Step 2 - Send the command: OP100000.
(Note: to enable checksum and time/date-stamp send OP100001).

PLEASE BE EXTREMELY CAREFUL IN SETTING THE CORRECT BIT IN STEP 2 AS SETTING THE WRONG BIT WILL RESULT IN THE SENSOR FUNCTIONING INCORRECTLY

To check the setting of the options word, send the command: OP?
The sensor should respond: **00000000,00100000M**.

(NB. M is the checksum character).

To disable checksum

To disable the checksum send the command OP0 in step 2 above.

The check sum is positioned after the message and before the end characters (<crlf>). The check sum value is between 0 and 127, and is the sum modulo 128 (the remainder after the sum is divided by 128) of all the ASCII values of the characters in the message except the end characters. The check sum value is replaced by its bit wise complement if it happens to be any of the following: ASCII 8 (backspace), ASCII 10 (linefeed), ASCII 13 (carriage return), ASCII 17 through ASCII 20 (DC1 through DC4), or ASCII 33 (exclamation point '!').

For Message:

C1 ... Cm <cksum><crlf>

The calculation is as follows:

$$< cksum >= \left(\sum_{n-1}^{m} c_n \right) MOD 128$$

IF <cksum> = 8 THEN <cksum> = 119
IF <cksum> = 10 THEN <cksum> = 117

IF <cksum> = 13 THEN <cksum> = 114
IF <cksum> = 17 THEN <cksum> = 110
IF <cksum> = 18 THEN <cksum> = 109
IF <cksum> = 19 THEN <cksum> = 108
IF <cksum> = 20 THEN <cksum> = 107
IF <cksum> = 33 THEN <cksum> = 94

1.4.7 Communications Configuration

TheVPF500 series sensor can use either RS232C or RS422/RS485 signal voltage levels. The configuration of the sensor is selected when ordering, since the change in protocol and line drivers involves changes to internal wiring. Check with the delivery paperwork to confirm the required configuration.

The configuration between RS422 and RS485 is user selectable. The following paragraphs provide the instruction for this adjustment and details for setting up the RS485 communication if required.

1.4.8 RS485 Configuration

The VPF500 series of sensors, purchased with RS422/485 communication protocol can be set by the user for either RS422 or addressable RS485 communication protocols. The software needs to be configured to use this protocol.

By default the sensor is configured at the factory for RS422 protocol unless specifically requested when ordering.

RS485 Protocol Format

The communication protocol is based on the Modbus ASCII Frame Format.
Each data request and transfer is configured as follows:

Start:	':' (3A Hex).
Sensor Address:	2 Character address field.
Data:	As standard HSS message format, see Section 2.
LRC Checksum:	2 Characters - Longitudinal Redundancy Check.
End:	2 Characters - Carriage return + Line Feed.

Start

The ':' (colon) symbol is used as a start flag which is 3A hex.

Address

The 2 character address is defined by the operator for the unit and programmed as specified in the set-up instructions (Paragraph 1.4.9). It can be any numeric value between 00 and 99. It is used by the unit to define the recipient of the message and by the slave to define the source of the message.

Data

This is a variable length ASCII character string as defined in section 2 for each of the models in this range. The master has a defined range of commands available for the HSS sensor. The HSS sensor has a range of defined data messages. These messages can either be sent as a response to a request for data by the master unit, or sent without any request on a timed basis, according to the instrument user settable configuration. However, it is recommended that a polled system is used in a multi-sensor application as this can avoid most data contention issues through the design of a suitable system operating schedule.

LRC Checksum

This enables error checking, allowing the master to request a re-send if errors are detected. For RS485 a Longitudinal Redundancy Check (LRC) Checksum is generated on the data.

NOTE: This checksum is different from the standard HSS Checksum.

The LRC is one byte, containing an 8–bit binary value. The LRC value is calculated by the transmitting device, which appends the LRC to the message. The receiving device calculates an LRC during receipt of the message, and compares the calculated value to the actual value it received in the LRC field. If the two values are not equal, an error is implied.

The LRC is calculated by adding together successive 8–bit bytes of the message, discarding any carries, and then two's complementing the result. It is performed on the ASCII message field contents excluding the 'colon' character that begins the message, and excluding the <crlf> pair at the end of the message. The LRC byte is converted to 2 ASCII characters and appended to the message.

For example, the message:
:42D?
Checksum is calculated as :
ASCII string 42D?
BYTE Values (in HEX) 34+32+44+3F

Sum is E9
One's compliment (0xFF – 0xE9) = 0x16
Two's compliment 0x16 + 1 = 0x17

Checksum is 0x17 (Hex)
Checksum ASCII characters are “17”
Transmitted string will therefore be:

:42D?17<CRLF>

End

All communications will end with the standard 2 characters, carriage return +.
line feed <CRLF> pair (ASCII values of 0D & 0A hex).

1.4.9 Sensor Addressing

To use addressable RS485 communication each sensor must have a unique address in the range 0-99. By default the sensor address is set to 0.

Querying the sensor address

To query the sensor address, send the command: ADR?
The sensor should respond with the address: e.g. 00.

Changing the sensor address

To change the sensor address, send the command: ADRxx
where xx is a number between 00 and 99.
e,g, ADR02 sets the sensor address to 02.
The sensor should respond with: OK.

Enabling the addressable RS485 Communications

The sensor can be configured to use addressable RS485 communications by setting the eighth bit in the options word, see Table 1-7 - Options Word (lower byte).

Step 1 - Send the command: CO.
Step 2 - Send the command: OP10000000.
(Note: to enable RS485 and time/date-stamp send OP10000001).

PLEASE BE EXTREMELY CAREFUL IN SETTING THE CORRECT BIT IN STEP 2 AS SETTING THE WRONG BIT WILL RESULT IN THE SENSOR FUNCTIONING INCORRECTLY

To check the setting of the options-word send the command: :00OP?FF.
The sensor should respond: :0000000000,1000000073.

(NB. :00 is the address and 73 is the LRC checksum character).

To disable RS485 Communications

To disable the RS485 communications (i.e. revert to RS422 protocol) send the command OP0 in step 2 above (or OP1 to enable time/date-stamp).

Checksum Override

When using addressable RS485 communications, the sensor will disregard any commands that do not have the sensor address or have an incorrect checksum. When transmitting to the sensor all commands must be prefixed by :XX (where XX is the address) and have the 2 character checksum on the end. If the checksum character is set to FF then the sensor will accept the message without checking the checksum. This is useful when using programs such as HyperTerminal for diagnostics.

For example.
A sensor with address 00 to request a data message:
Send command:
:00D?FF

Recommendations

When using the sensor on an RS485 network it is recommended that the sensor be set up in polled mode (Bit 1 of Operating State Byte set to "0") rather than transmitting a data message automatically. See paragraph 1.4.2 for full instructions for setting this Operating State Byte.

NOTE: When RS485 communications are enabled the sensor will not output the "Biral Sensor Startup" message on power up and reset.

1.4.10 Configuring the Relay Functions

To get the current relay configuration send the command JRO?
The sensor will respond with a number which corresponds to:

Value	Description
0	No Relays Configured.
2	Fault Relay, Relay 1 triggered on visibility and Relay 2 triggered on visibility.
4	Fault Relay, Relay 1 triggered on visibility and Relay 2 triggered on window contamination.

Table 1-10 - Relay configuration

The default value is set to 0 as relays are an optional addition.

NOTE: A response of 225 means that no relays are configured (the same as '0').

To change the configuration

To change the relay configuration, provided that the relay option had been ordered, send the command JROx, where x is the value from the table above.

e.g. JRO4

Configures Relay 2 to be a switched on window contamination value.

1.4.11 Changing the Relay Visibility Thresholds

To read the Visibility Threshold levels

NOTE: The visibility settings for the relays are always set as a MOR value. That is, the settings are always in Km.

To read the visibility threshold levels for Relay 1 and relay 2 send the following command:

RL*n*?

where *n* is the relay number (either 1 or 2).

The sensor will respond with the visibility threshold in km.

e.g. 10.00 km

To change the visibility Threshold levels

To change the visibility threshold levels for relay 1 or relay 2 send the following command:

RL*n,xx.xx*

where *n* is the relay number (either 1 or 2)

and *xx.xx* is the threshold level in km.

e.g. to set the threshold for relay 1 to 1km send the command: RL1,1.00.

NOTE: If relay 2 is set to switch on window contamination, it will switch On when the contamination exceeds the window contamination warning level. The default setting is 10% reduction in window transmission, but it can be set by the user between 0 and 30% using command WTx, see , page 39.

1.4.12 Configuring the visibility relay operating characteristics

The operating characteristics of relay 1, and relay 2 if set to switch on visibility, can be adjusted to suit the specific application.

To ensure that the relays will only switch on and off once stable visibility conditions have been achieved, an adjustable delay can be set. This delay can be independently set for both relay turn on and relay turn off, to any value between 0 and 15 minutes. For example, if the turn on delay is set to 5, the visibility must remain below the turn on threshold for a period of 5 minutes before the relay is switched on.

To avoid continual switching of the relay if the visibility remains close to the set threshold, a hysteresis can be introduced between the turn on value and the turn off value. This hysteresis value can be set between 5% and 25%. For example, if it is set to 10%, the visibility relay will turn on when the visibility drops below the set threshold, e.g.1km, but it will only turn off when the visibility rises to {set point + 10%}, which for this case would be 1.1km.

The following commands are used to set these relay operating characteristics.

NOTE: The symbol 'n' is used to denote the relay number in all the following commands. This will be either 1 or, if relay 2 is set to visibility it can be 2.

Visibility Relay On Delay

To get the current relay On delay time send the command **RVONn?**
The sensor will respond with a number which corresponds to the current visibility timer On delay used by the relay n. This threshold is a value in minutes between 0 and 15.

To set the current relay On delay send the command **RVONn,xx**
Where xx is the On delay value in minutes between 0 and 15.

The sensor will respond with OK if the set value is within the specified range, or BAD CMD if out of range.

Visibility Relay Off Delay

To get the current relay Off delay time send the command **RVOFFn?**
The sensor will respond with a number which corresponds to the current visibility timer Off delay used by the relay n. This threshold is a value in minutes between 0 and 15.
To set the current relay Off delay send the command **RVOFFn,xx**
Where xx is the Off delay value in minutes between 0 and 15.

The sensor will respond with OK if the set value is within the specified range, or BAD CMD if out of range.

Visibility Relay Off Hysteresis

To get the current relay Off Hysteresis send the command **RLHn?**

The sensor will respond with a number which corresponds to the current visibility relay Off hysteresis used by the relay n. This hysteresis is a value between 5% and 25%.

To set the current relay Off Hysteresis send the command **RLHn,xx**

Where xx is the Off hysteresis value between 5% and 25%.

The sensor will respond with OK if the set value is within the specified range, or BAD CMD if out of range.

1.4.13 Configuring the visibility output mode

The digital and analogue outputs can be set by the user to be either values of Meteorological Optical Range (MOR), or Extinction Co-efficient (Exco).

To get the current output mode send the command **AN?**

The sensor will respond with a number as follows:

- 0 = MOR (default)
- 1 = Exco

To set the current output mode send the command **ANx.**

Where x is the required value as above for MOR or Exco.

The sensor will respond with OK if the set value is within the specified range, or BAD CMD if out of range.

1.4.14 Configuring the Analogue Visibility Output Range

The analogue outputs are either a voltage or a current proportional to the actual reading of either the MOR or the EXCO, dependent on which output mode has been selected, see paragraph 1.4.13, Configuring the visibility output mode.

The voltage output will be a value from 0 to 10V, linearly proportional to the reading with 0V corresponding to a zero reading and 10V representing the maximum value selected as detailed below.

The current output will be a value from 4mA (0mA) to 20mA, linearly proportional to the reading with 4mA (0mA) corresponding to a zero reading and 20mA representing the maximum value selected as detailed below.

The output range for the analogue outputs can be user selected to achieve the best possible accuracy over the specific range of interest. A number of standard ranges are available for either MOR outputs or Exco outputs. If required a 'special' range can be defined by the user at time of purchase and be factory set.

NOTE: The special range can be selected by the user at any time, but the limits for this range are factory set.

Analogue Output MOR Ranges

To get the current analogue MOR output range send the command **ANMOR?**

The sensor will respond with a number as follows:

- 0 = 10m to 2Km
- 1 = 10m to 20Km
- 2 = 10m to 32Km
- 3 = 20m to 50Km
- 4 = Special (default 10m to 75Km).

To set the current analogue Output MOR range, send the command **ANMORx.**
Where x is the value as above for the required range.

The sensor will respond with OK if the set value is one of the specified ranges, or BAD CMD if out of range.

Analogue Output Exco Ranges

To get the current analogue Exco output range send the command **ANEXCO?**

The sensor will respond with a number as follows:

- 0 = 0 to 150 Km^{-1}
- 1 = 0 to 300 Km^{-1}
- 2 = Special (default 0 to 300 Km^{-1})

To set the current analogue Output Exco range, send the command **ANEXCOx.**
Where x is the value as above for the required range.

The sensor will respond with OK if the set value is one of the specified ranges, or BAD CMD if out of range.

1.5 STEP 5 - Installation

Please consider the following factors when installing the sensor:

(1) Siting considerations.
(2) Height of the sensor above ground.
(3) Orientation of the sensor.
(4) Mounting the sensor.
(5) Electrical grounding.

Each of these factors is covered in more detail below:

1.5.1 Siting Considerations

Pollutants – Care should be taken to ensure that the sensor is situated away from any possible sources of pollutants (for example car exhausts, air-conditioning outlets etc.). Particulates entering the sensor's sample volume will cause errors in the reported visibility measurements and precipitation reports.

Reflected Light – Care should be taken to ensure that the sensor is situated away from any causes of reflected light (for example walls, trees and people etc.). Reflected light entering the sensor's optics will cause errors in the reported visibility measurements.

Air-flow – Care should be taken to ensure that the sensor is situated away from objects that disrupt the 'normal' flow of air to and through the sensor sampling volume (for example walls, trees and other equipment etc.).

RFI Interference – In addition to the above mentioned natural effects that may influence the performance of the sensor, due regard should also be given to radiated electrical interference. Sources of potential interference include radio antennas and radiated transients from high-voltage plant located near to the sensor installation.

1.5.2 Height Above Ground:

The optimum height at which to mount the sensor depends on the application. The table below shows some recommended heights.

Application	Typical height	Comment
Highway fog-warning systems.	1.5 to 2 meters (4.9 to 6.6 feet).	Recommended height for the sensor sample volume is the average distance of a vehicle driver's eyes above the roadway.
Airport applications.	4.3 meters (14 feet) above the runway.	This is the standard height for visibility sensors in the U.S. This height may differ in other countries.
General meteorological.	1.8 meters (6 feet).	This is a suitable height unless the particular application dictates otherwise.

Table 1-11 - Recommended Sensor Height Above Ground

1.5.3 Orientation of Sensor Head

The orientation of the sensor head should be such that the rising or setting sun does not appear in the field-of-view of the receiver lens. This is with the receiver optics aligned with true North (true South in the Southern Hemisphere) as shown in Figure 1-2.

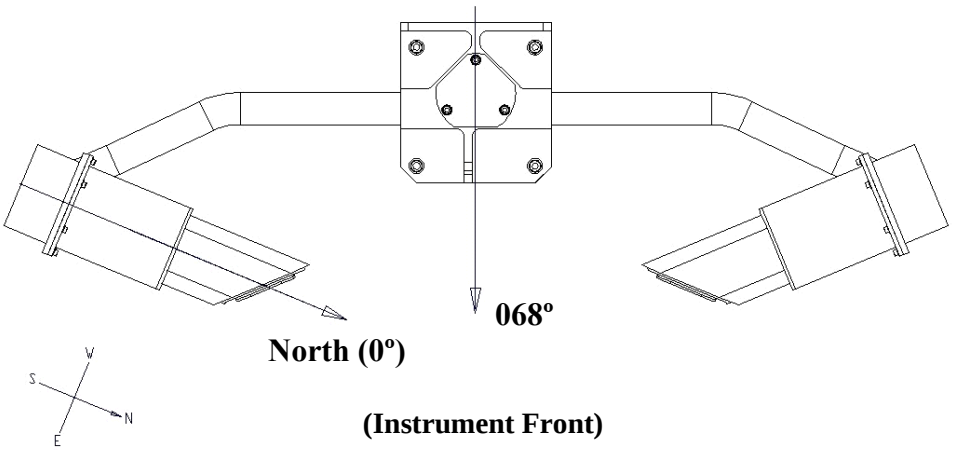

Figure 1-2 - VPF510 Orientation

It is desirable to avoid sunlight from flooding the receiver optics and to avoid sunlight induced noise spikes from creating false precipitation counts, although false-alarm algorithms in the sensors invariably eliminate such false counts.

1.5.4 Mounting the Sensor

The sensor head should be attached at the very top of the mounting pedestal with a U-bolt. The mast should be made from galvanised steel pipe or heavy walled aluminium tube whose outer diameter is in the range from 40 to 64 mm. Pipe or tubing with an outer diameter greater than 66 mm will not permit use of the U-bolt provided with the instrument. Pipe diameters less than 40 mm may not provide the U-bolt with adequate bearing surface. *Note: Pipe sizes often refer to their inside diameter; some 60 mm (ID) pipe may be too large for the U-bolts to fit around.*

A stainless steel closed-circle U-bolt with hardware is provided for securing the sensor to the top of the mast. A V-block saddle is attached to the sensor head mounting plate to oppose the U-bolt, thus providing a secure grip on the mast. The sensor head should be mounted near the very top so that the mast will not interfere with the free flow of fog or precipitation through the sample volume. The flat stainless steel washers should be placed next to the anodised surface of the mounting plate to prevent gouging by the lock washers as the nuts are tightened.

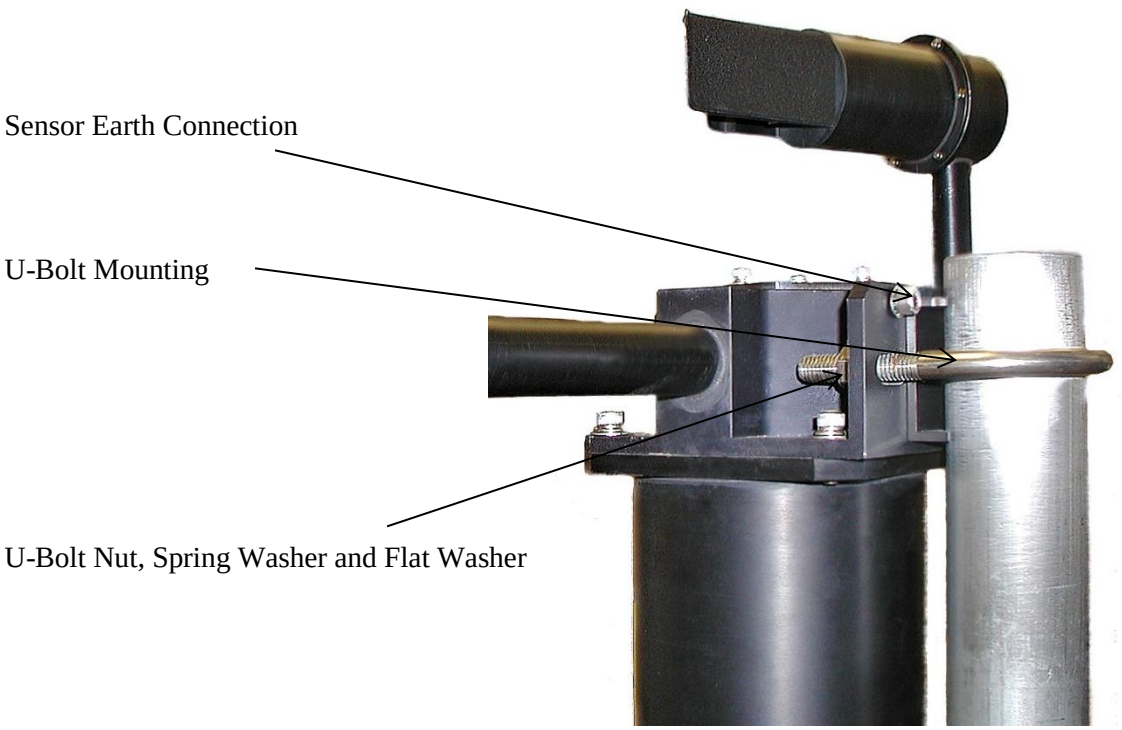

Figure 1-3 - U-Bolt Mounting Method

1.5.5 Electrical Grounding

Possible instrument failure can result from the damaging effects of over-voltage transients induced on the power line and the signal distribution lines.

Destruction of sensitive components can result from unprotected lines, or instrument failure may occur over a long period of time due to slow device degradation. Destructive over volt transients can occur in many ways; e.g., lightning induced transients, AC power line transients and EMI/RFI electromagnetic noise. The power/control subsystem of the sensor contains transient surge-arrestors on all power and signal lines as a standard feature. EMI filters are present on the power and lines entering the power/control subsystem.

It is essential to connect the sensor to earth ground for maximum protection of the instrument. The following notes are intended to provide some guidance in the design and construction of an electrical grounding system.

(1) Ground Rod: An eight-foot ground rod should be used to make contact with moist soil during even the driest periods.

(2) Lead Lengths: No. 6 AWG solid copper wire should be used to connect the instrument (and thus the transient voltage suppressers) to the ground rod. Use the shortest and most direct paths to the ground. Simply connect the ground lead to the grounding screw provided above the U-bolt fixing point on the rear of the mounting flange, see Figure 1-3 - U-Bolt Mounting Method.

(3) System Interconnections: Eliminate all isolated ground loops. The shield of the signal output cable, for example, should be attached only at one end of the cable and left floating at the other end. Preferably, it should be attached to ground at the sensor end of the signal cable.

(4) Connections: Use tight, corrosion-proof bare metal connections throughout the grounding system.

1.6 STEP 6 - Test and Commissioning

The following steps contain a few basic checks to provide confidence that the unit is functioning correctly after installation.

These checks are recommendations only and are neither essential nor exhaustive.

1.6.1 Checking Power Supply

Before connecting the power cable to the sensor, the supply voltage being provided should be measured to ensure that the voltage present is compatible with the sensor power requirement. Use a multimeter to measure AC/DC voltage (dependent on sensor voltage according to order). For AC supplies, check conformity with local and National installation requirements (see CE Certification – Safety, page vii).

DANGER of electric shock!
Exercise caution when performing this measurement.

WARNING
Only connect the power cable if it matches the voltage requirements of the sensor. Damage caused by improper voltage connection is not covered under warranty.

1.6.2 Checking Data link

Use of the digital data link is the most direct route to determining the correct operational status of the instrument.

1. Connect the power-input cable to a local power source (do not turn power source on).

2. Connect the signal cable to a PC running the Biral Sensor Interface Software. If this is not available, use a terminal program - for example Windows® Hyper Terminal™. (For RS422/485 sensors a RS422 to RS232 converter must be used).
   Note: Biral recommends testing to be done with RS232 or RS422 as applicable. When you are confident that the sensor is working it can then be set up for RS485 if required.

3. Configure the terminal program as follows:

Default Interface Parameters

Baud Rate..... 9600
Data Bits..... 8
Stop Bits..... 1

Parity ..... None
Flow Control ..... None

4. Turn the local power source "ON".

   If communications are working the sensor will respond with “Biral Sensor Startup”.

5. Check Data Transmission To Sensor.

   Send the command R? from the PC terminal to the sensor.

   The sensor will respond with its remote Self-Test & Monitoring message.

   For example:
   100,2.509,24.1,12.3,5.01,12.5,00.00,00.00,100,105,000,00,00,00,+000.0,4063

6. Check Data Transmission From Sensor.

   If the sensor is NOT in polled mode:
   Wait for the sensor to transmit a Data Message (approx. 80 seconds from power up).

   If the sensor is in polled mode, send the command: D? from the PC terminal to the sensor.
   A Data Message will be transmitted immediately.

1.6.3 Remote Self-Test and Monitoring Message

Field 1:	Space	Message starts with a space
Field 2:	100 or 108	Heater state and error flags
Field 3:	2.450 - 2.550	Internal Reference voltage
Field 4:	9.00 - 36.00	Supply Voltage
Field 5:	11 -15	Internal operating voltage
Field 6:	4.5 - 5.5	Internal operating voltage
Field 7:	11 -15	Internal operating voltage
Field 8:	*00.00*	*Not applicable in this check*
Field 9:	*00.00*	*Not applicable in this check*
Field 10:	85 - 105	Transmitter power monitor
Field 11:	80 - 120	Forward Receiver monitor (optional)
Field 12:	*000*	*Not applicable in this check*
Field 13:	00 - 99	Transmitter Window Contamination
Field 14:	00 - 99	Forward Receiver Window Contamination (Optional)
Field 15:	*00*	*Not applicable in this check*
Field 16:	*000.0*	*Not applicable in this check*
Field 17:	3300-4200	ADC Interrupts per second

Table 1-12 - Remote Self-Test and Monitoring Message Fields

Check that the values in the remote Self-Test & Monitoring message from the previous Data Transmission To Sensor Check are within the ranges indicated in Table 1-12 - Remote Self-Test and Monitoring Message Fields.

1.6.4 Calibration Check

The sensor is fully calibrated before it leaves Biral. However, if you would like to carry out a user confidence calibration check please follow the calibration check procedure in paragraph 5.1, page 47 to ensure that the MOR value changes i.e. the sensor responds to changes in visibility.

THIS PROCEDURE CAN ONLY BE COMPLETED IF A SUITABLE VPF500 SERIES CALIBRATION KIT IS AVAILABLE

CONGRATULATIONS

YOUR SENSOR SHOULD NOW BE FULLY CONFIGURED, TESTED AND INSTALLED READY FOR USE

THE REMAINDER OF THIS MANUAL COVERS:

- **STANDARD DATA MESSAGES**
- **COMMANDS AND RESPONSES**
- **OPERATIONAL AND MAINTENANCE PROCEDURES**
- **CALIBRATION CHECK AND RE-CALIBRATION PROCEDURE**
- **MEASUREMENT PRINCIPLES**
- **SENSOR DETAILS AND SPECIFICATIONS**

2 STANDARD OPERATING DATA

When in standard mode a data message will be output from the sensor every measurement period (default 60 seconds). When in polled mode the same message is output only in response to the D? command. The operating mode is determined by Bit 1 of the Operating State Word. The standard mode (default) is used when Bit 1 is set to “1”. If set to “0”, the polled mode will be selected. Instructions for setting this bit are provided in paragraph 1.4.2 page 12.

Note: All responses from the sensor are appended with carriage return and line feed characters (<crlf>, see Paragraph 1.3).

2.1 Data Output Message VPF510

2.1.1 VPF510 Data Message to Output MOR

This message is selected when AN is set to ‘0’. See paragraph 1.4.13, page 25.

The data message format is:

<Date>,<Time>,HSS510,aaa,bbb.bb KM,ccc<cs><crlf>

Message	Meaning
<Date>	Optional Date string in the form DD/MM/YY.
<Time>	Optional Time string in the form HH:MM:SS.
HSS510	Sensor Type.
aaa	Instrument identification number set by the user.
bbb.bb KM	Total MOR in km.
c c c	Self-Test and Monitoring (see paragraph 4.2). O = Other self-test values OK X = Other self-test fault exists O = Windows not contaminated X = Windows contaminated – cleaning recommended/required F = Windows contaminated – fault O = Sensor not reset since last "R?" command X = Sensor reset since last "R?" command
<cs>	If selected this will be the checksum character. The checksum is off by default.

Table 2-1 - VPF510 Data Massage to Output MOR

2.1.2 VPF510 Data Message to Output Exco

This message is selected when AN is set to '1'. See paragraph 1.4.13, page 25.

The data message format is:

<Date>,<Time>,HSS510,aaa,bbb.bb,ccc<cs><crlf>

Message	Meaning
<Date>	Optional Date string in the form DD/MM/YY.
<Time>	Optional Time string in the form HH:MM:SS.
HSS510	Sensor Type.
aaa	Instrument identification number set by the user.
bbb.bb	Total Exco in km^{-1}.
c c c	Self-Test and Monitoring (see paragraph 4.2). O = Other self-test values OK X = Other self-test fault exists O = Windows not contaminated X = Windows contaminated – cleaning recommended/required F = Windows contaminated – fault O = Sensor not reset since last "R?" command X = Sensor reset since last "R?" command
<cs>	If selected this will be the checksum character. The checksum is off by default.

Table 2-2 - VPF510 Data Massage to Output Exco

3 COMMANDS AND RESPONSES

3.1 Sensor Commands

All commands should be terminated with <Carriage Return> and <Line Feed> <crlf>, (see Paragraph1.3).

Command	Function	Response	Default
ADR?	Send RS485 address. See **paragraph 1.4.9.**	**xx**	**00**
ADRxx	Set RS485 address. Range 00-99. See **paragraph 1.4.9.**	**OK**	**--**
AN?	Send the current selected visibility type to be output. See **paragraph 1.4.13.**	**x**	**1 (EXCO)**
ANx	Set the current selected visibility type to be output. See **paragraph 1.4.13.**	**OK**	**--**
ANMOR?	Send the current selected visibility range (as MOR). See **paragraph 1.4.14.**	**x**	**2(10-32Km)**
ANMORx	Set the current selected visibility range (as MOR). See **paragraph 1.4.14.**	**OK**	**--**
ANEXCO?	Send the current selected visibility range (as EXCO). See **paragraph 1.4.14.**	**x**	**1(0-300Km^{-1})**
ANEXCOx	Set the current selected visibility range (as EXCO). See **paragraph 1.4.14.**	**OK**	**--**
BT?	Send instantaneous value of Total EXCO .	**±xxx.xx**	**--**
CE	Perform EXCO calibration. (Calibration must be enabled).	**See para. 5.2**	**--**
CO	Enable calibration.	**OK**	**--**
CX	Disable calibration.	**OK**	**--**
D?	Send the latest data message.	**See section 2**	**--**
DHO	Turn hood heaters on temporarily. If off at time of command, the heaters will turn off after 2 minutes (for maintenance only).	**OK**	**--**
DHX	Turn hood heaters off temporarily. If on at time of command, the heaters will turn on after 2 minutes (for maintenance only).	**OK**	**--**
IDx	Set instrument identification number displayed in data message. Range x = 1 to 999.	**OK**	**1**

Command	Function	Response	Default
JRO?	Send the current selected relay configuration. See **paragraph 1.4.10.**	**xxx**	**2**
JROxxx	Set the required relay configuration. See **paragraph 1.4.10.**	**OK**	**--**
OP?	Check Option Word configuration.	**See para. 1.4.6**	**0**
OPXXXXXXXX	Set configuration options. See **paragraph 1.4.6.**	**OK**	**--**
OS?	Check the Operating State configuration.	**See para 1.4.2**	**1 or 1001**
OSXXXXXXXX	Set Operating State. See operating state configuration. See **paragraph 1.4.2.**	**OK**	**--**
PV?	Send program version message.	**SI xxxx.yy**	**--**
R?	Send remote self-test and monitoring message.	**See Para 3.1.1**	**--**
RLn?	Send the current relay Visibility Threshold (for relay 'n'). See **paragraph 1.4.11.**	**xx.xx KM**	**3.70 Km**
RLn,xx.xx	Set the current relay Visibility Threshold (for relay 'n'). See **paragraph 1.4.11.**	**OK**	**--**
RLHn?	Send the current visibility relay Off Hysteresis (for relay 'n'). See **paragraph 1.4.12.**	**xx**	**20 (%)**
RLHn,xx	Set the current visibility relay Off Hysteresis (for relay 'n'). See **paragraph 1.4.12.**	**OK**	**--**
RST	Restart instrument.	**OK**	**--**
RVONn?	Send the current visibility relay On Delay Time (for relay 'n'). See **paragraph 1.4.12.**	**xx**	**4 min.**
RVONn,xx	Set the current visibility relay On Delay Time (for relay 'n'). See **paragraph 1.4.12.**	**OK**	**--**
RVOFFn?	Send the current visibility relay Off Delay Time (for relay 'n'). See **paragraph 1.4.12.**	**xx**	**8 min.**
RVOFFn,xx	Set the current visibility relay Off Delay Time (for relay 'n'). See **paragraph 1.4.12.**	**OK**	**--**
T?	Send instrument times message.	**See Para 3.1.2**	**--**
SN?	Send instrument serial number.	**Jxxxx.xx**	**--**
TAx	Set auxiliary measurement sample period. Range x= 2-20 (seconds).	**OK**	**5 sec.**
TMx	Set measurement interval. Range x = 10-300 (seconds).	**OK**	**60 sec.**

Command	Function	Response	Default
TR?	Send current date and time. **See paragraph 1.4.4.** (The final ,000 is an internal fixed constant).	**FRIDAY , 23/03/12, 13:15:25,000**	--
%SDWDDMMYY	Set current date. **See paragraph 1.4.4.**	**OK**	--
%STHHMMSS	Set current time. **See paragraph 1.4.4.**	**OK**	--
WT?	Send current window contamination threshold for warning indication.	**XX**	**10 (%)**
WTx	Set window contamination threshold for a warning indication, % transmission. Range: 0 to 30 (%) (Calibration must be enabled). (Default = 10).	**OK**	--
%Bx	Set communication baud rate. Range 1-7.	**See para. 1.4.5**	**4 (9600)**

Table 3-1 - Commands for VPF500 Series of Sensors

3.1.1 Command R? - Send Remote Self-Test and Monitoring Message

Example response:

100,2.509,24.1,12.3,5.01,12.5,00.00,00.00,100,105,107,00,00,00,+021.0,4063

The various fields in the response are as follows:

Field 1:	**Space**	The message starts with a space
Field 2:	**ABC**	Heater state and error flags

A = 1 - Window heaters ON
A = 2 - De-icer (hood) heaters ON
A = 4 - A/D Control signal error
B = 1 - EPROM checksum error
B = 2 - Non-volatile memory checksum error
B = 4 - RAM error
B = 8 - Register error
C = 2 - Ired commanded OFF
C = 4 - Receiver test in progress (Ired OFF)
C = 8 - Sensor power reset since last R? command

or any combination of these (i.e. if both the window and hood heaters are ON the first character A would be 3)

Field 3:	2.450 - 2.550	Internal reference voltage
Field 4:	9.00 - 36.00	Supply voltage for DC sensors only
Field 5:	11 - 15.0	Internal operating voltage
Field 6:	4.5 - 5.5	Internal operating voltage
Field 7:	11 - 15.0	Internal operating voltage
Field 8:	0.00 - 6.00	Forward scatter background brightness
Field 9:	0.00 - 6.00	Not Used
Field 10:	85 - 105	Transmitter power monitor
Field 11:	80 - 120	Forward receiver monitor (Advanced self-test only)
Field 12:	80 - 120	Not Used
Field 13:	00 - 99	Transmitter window contamination
Field 14:	00 - 99	Forward receiver window contamination (Optional) (Advanced self-test only)
Field 15:	00 - 99	Not Used
Field 16:		Not Used
Field 17:	3300-4200	ADC interrupts per second

Table 3-2 - Command R? Response

3.1.2 Command T? - Send Instrument Times Message

Response: **aaaa,bbbb,ccccc,dddd**

aaaa: Measurement interval for each operational data message (10 to 300 seconds) (default = 60)
bbbb: Auxiliary measurement sample period - time between measurement of peripheral signals during measurement interval (2 to 20 seconds) (default = 5)
ccccc: Not used.
dddd: Min window heat time in seconds (when Operating State bits 7 and 8 = 01) (Default=300 seconds)

Table 3-3 - Command T? Response

3.2 Sensor Responses

Response	Meaning
BAD CMD	Your command was not understood by the sensor. Check the text of the command and re-send.
COMM ERR	An error was detected in a character in the command. Re-send the command.
OK	Command with no quantitative response was understood and executed.
TIMEOUT	Command was sent with more than 10 seconds between characters. Re-send the command.
TOO LONG	Command message was longer than 24 characters including end characters. Re-send the command.

Table 3-4 - Responses From Sensor

4 MAINTENANCE PROCEDURES

The VPF500 series of sensors require very little maintenance. The following sections detail the checks that are advisable to ensure continued good operation of the sensor. The frequency of these checks depends upon the location and environmental conditions under which the sensor operates.

It is suggested that a general check, plus window cleaning should take place typically at three monthly intervals. This period may be increased or decreased dependent on the contamination determined during these inspections. It is also recommended that a calibration check (see paragraph 5.2) is carried out at six monthly intervals to verify that the instrument is still continuing to perform within the specification.

Paragraph 4.2, Self-Test Codes, describes the meaning of the self-test codes provided in all the standard data messages. It specifies what actions, if any, are required to restore the sensor to full operational capability.

4.1 General Checks

A general check of the physical condition of the sensor should be carried out at regular intervals. Particular attention should be paid to the condition of the cables from the base of the unit.

4.1.1 De-mister Heaters (fitted as standard to all sensors)

The window de-misters are low powered heaters designed primarily to prevent condensation. They maintain the temperature of the windows at a few degrees above ambient temperature.

The default setting is ON. See paragraph 1.4.3 for details.

The warmth may be detected with the finger on the window but is easier to detect using a thermometer with surface temperature probe. The windows should be between 5 and 10°C above ambient temperature after at least 10 minutes operation. Ensure that windows are cleaned after coming into contact with the skin or other sources of contamination.

4.1.2 Hood Heaters (optional)

Hood heaters, if ordered, are fitted to the inside of each of the two hoods.
The hood heaters are high-power heaters to help prevent the build-up of frozen precipitation in the hoods. The operation of these heaters is dependent on the ambient temperature (by default); they are only switched on when the temperature is below 2ºC. When switched on, it is easy to detect the heat from these heaters by placing a finger on the end of the hood.

When the temperature is above the switching temperature the heaters will be switched off but may be controlled using a PC running a terminal program such as the Biral Sensor Interface Software, or Windows Hyper Terminal, see page 1. The heaters may be switched on temporarily using the command DHO and off again using the command DHX.

4.1.3 Window Cleaning

A VPF500 series sensor is an optical instrument and is therefore susceptible to accumulation of contaminants on the windows in the hoods. The windows should be cleaned by gently wiping the windows using a pure alcohol (propanol) and a soft cloth *(appropriate safety precautions must be taken when using pure alcohol)*.

All VPF500 series of sensors are fitted with a Transmitter Window monitoring system. An equivalent Receiver Window monitoring system may be fitted as an option if required. This monitoring system measures the optical contamination of the window and corrects the measured EXCO or MOR to compensate for this contamination. A warning is generated when the contamination reduces the signal by more than a pre-set amount (default 10%). When this warning occurs, the windows should be cleaned at the earliest possible opportunity. If the contamination continues to increase up to a pre-set limit of 30%, the appropriate part of the remote maintenance and self-test message in the sensor Data Output Message changes from X (warning) to F (fault) – see paragraphs 2 and 4.2.2. The accuracy of the instrument, if operated at greater contamination levels, may begin to deteriorate. The windows require cleaning as a matter of urgency.

4.2 Self-Test Codes

Self-Test and Monitoring information is provided in the standard Operating Data Message. This information consists of three alpha-numeric characters which have the following meanings.

NOTE: The command "R?" provides a response with full diagnostic information. The extent of this information depends on the sensor configuration specified at time of purchase. This response is detailed in paragraph 3.1.1.

4.2.1 Most Significant Character (Sensor Reset Flag)

This will be set to "X" on start-up. It will only be set to "O" following receipt of an "R?" command. If it subsequently is set to "X", this is an indication that a fault, such as a power interruption, has caused the processor to reset. This is generally of no importance, but may assist in the diagnosis of any other problem which may have occurred previously.

4.2.2 Central Character (Window Contamination)

All 500 series sensors have monitoring of contamination on the transmitter window. Monitoring of the receiver window is an option available at time of purchase. The processor compensates the visibility reading to allow for this contamination and also checks each of the contamination figures against a value of either 10% (default value) or 30%. This Self-test code can be one of three characters, O, X or F dependent on the contamination reading(s) received. These have the following meaning:

"O":	Window contamination is less than 10% (Default value; can be adjusted by the user, see command WTx, paragraph 3.1). No action required.
"X":	Window contamination warning. The window contamination is between 10% and 30%. The visibility reading provided is corrected utilising this contamination figure, but it is recommended that the windows are cleaned at the earliest possible opportunity.
"F":	Window contamination fault. The window contamination is above 30%. Although the visibility reading is still corrected using this contamination figure, the accuracy may deteriorate as the contamination increases. The windows require cleaning.

4.2.3 Least Significant Character (Other Self-Test errors)

A variety of operating parameters are regularly checked against normal operational figures as an early warning of possible sensor faults. This character indicates whether all parameters other than window contamination are normal. This Self-test code can be one of two characters, O, or X . These have the following meaning:

"O": No Fault. No action required.

"X": Internal error. Send command "R?" to list all internally monitored parameters. Check against paragraph 3.1.1 to determine the cause of this error. Send command "RST to restart the sensor. If the fault persists, arrange for the sensor to be serviced at the earliest possible opportunity.

4.3 User Confidence Checks

The following user confidence checks require bi-directional communications with a PC running the Biral Sensor Interface Software. If this is not available, use a terminal program - for example Windows Hyper Terminal.

4.3.1 EXCO Calibration Check

If you wish to carry out a user confidence calibration check please follow the calibration check procedure in paragraph 5.1 page 47, to ensure that the Exco value changes i.e. the sensor responds to changes in visibility.

THIS PROCEDURE CAN ONLY BE COMPLETED IF A SUITABLE HSS SERIES CALIBRATION KIT AND PC ARE AVAILABLE

4.3.2 Window Monitor Checks

The VPF500 series of sensors monitor the transmitter window for contamination. The values measured are used to adjust the EXCO value, and are also used to determine when the windows should be cleaned.

The performance of the monitoring circuit can be checked by the following procedures:

Step 1. Clean the transmitter window.

Step 2. Send the command: R?

Step 3. Verify that the 'Transmitter Window Contamination' field value (see paragraph 3.1.1) in the sensor response is 00 to 02.

Step 4. Insert a piece of white card or paper in the transmitter hood that blocks and almost touches the window.

Step 5. Send the command: R?

Step 6. Verify that the 'Transmitter Window Contamination' field value in the sensor response is much greater than 10 (eg 99).

Step 7. Remove the white card.

4.3.3 Receiver Background Brightness Measurement Checks

The receiver background brightness value measures the optical signal detected by the receiver caused by the intensity of the ambient background. This value is used to set the threshold values for precipitation particle detection and interpretation. The following procedure will check this function:

Step 1. Insert a zero plug (part of the VPF500 sensor calibration kit) in the receiver hood, blocking all light from the window.

Step 2. Send the command: R?

Step 3. Verify that the value in the 'Forward Scatter Receiver Background Brightness' field in the sensor response (see paragraph 3.1.1) is less than 00.06.

Step 4. Remove the zero plugs from the Sensor Head receiver hood.

Step 5. While shining a flashlight directly into the receiver window send the command: R?
NOTE: This test requires the use of a filament bulb flashlight. There is insufficient IR radiation from a visible LED source.

Step 6. Verify that the value in the 'Forward Scatter Receiver Background Brightness' field in the sensor response is much greater than 00.06.

5 CALIBRATION PROCEDURES

This section explains how to CHECK the calibration of the sensor and ONLY IF NECESSARY how to recalibrate it.

ALL THE PROCEDURES IN THIS SECTION REQUIRE
A HSS SERIES CALIBRATION KIT

The Extinction Coefficient (EXCO) calibration of the forward scatter channel is checked by the procedure outlined below.

The Calibration Reference Plaque used for the calibration check has been assigned a forward scatter value which is a simulation of an EXCO expressed in (kilometres)$^{-1}$. This value is shown on the label which is attached to the arm of the calibration plaque. This label also states the serial number of the calibration plaque to ensure that the correct plaque is used with that arm.

Please see Figure 5-1 - Assembly of Calibration Reference Plaque for a diagram of the Calibration Reference Plaque attached to a sensor.

5.1 Calibration Check

The following instructions show you how to check the calibration of a VPF500 series sensor. This procedure can only be completed with:

1. A HSS Series Calibration Kit.
2. Connection to a PC running the Biral Sensor Interface Software, or, if this is not available, terminal emulation software (such as Windows ® Hyper Terminal™). This will use the signal data cable as provided. *If you need help with this please do not hesitate to contact us (contact details on page vi).*

CALIBRATION CHECK NOTES

PLEASE READ THESE NOTES BEFORE CONTINUING

The EXCO (Extinction Coefficient) values depend heavily on the location and prevailing weather conditions and should only be carried out with the sensor:

1. **MOUNTED OUTSIDE AND ON A CLEAR DAY (VISIBILITY>10KM)**
2. **POWERED FOR AT LEAST 1 HOUR**
3. **NOT LOCATED NEAR A WALL OR OTHER OBSTRUCTION**
4. **NOT RECEIVING OPTICAL REFLECTIONS (FROM SURFACES OR CLOTHING)**

Assembly of the calibration plaque to the sensor

The calibration reference plaque should first be attached to the arm. Confirm that the serial number marked on the calibration reference plaque matches that on the label on the calibration arm. If not, do NOT use this assembly as it may not give a true calibration. This assembly should then be attached to the sensor as shown in Figure 5-1 - Assembly of Calibration Reference Plaque.

Note: All commands should be terminated with <Carriage Return> and <Line Feed> <crlf>, (see Paragraph1.3).

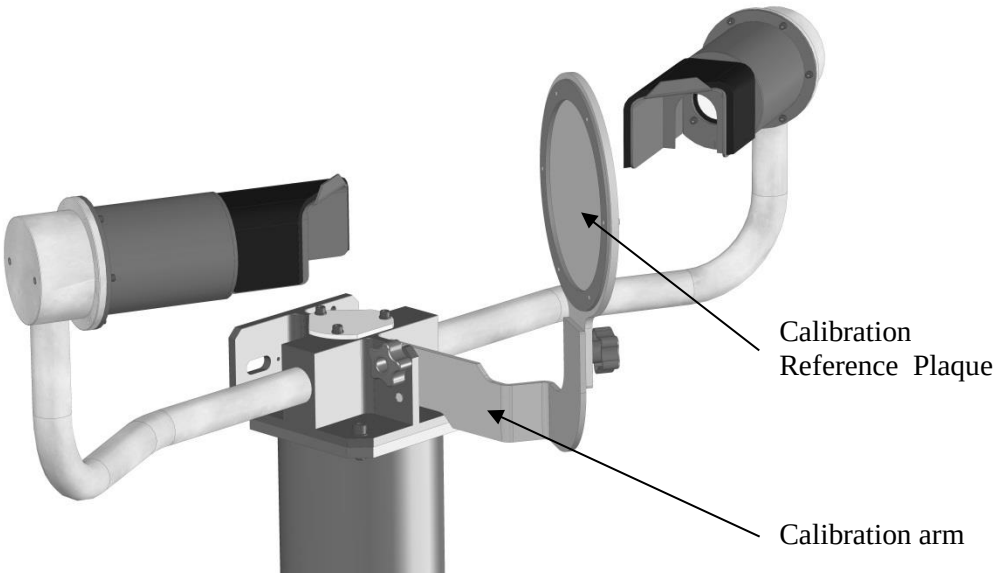

Figure 5-1 - Assembly of Calibration Reference Plaque

Step 1: Clean all windows on the sensor using pure alcohol (propanol) and soft cloth or tissue, preferably lens tissue. Check the cleanliness using a portable light if possible.

(Step 1 may not be necessary if checking or commissioning a new sensor).

Step 2: Attach the calibration reference plaque to the sensor as shown in Figure 5-1 - Assembly of Calibration Reference Plaque (power to the sensor need not be removed). Do not stand close to the sensor during calibration as reflections may cause errors in the reported values.

EXCO Zero Check:

Step 3: Insert GREY FOAM PLUGS in the front of each window blocking out all light. (There are 3 foam plugs top left in the calibration case - you will only use 2 of these for the VPF510).

Step 4: Send the command “RST”. Verify the response “OK”.

Step 5: If the sensor is operating in the polled mode, send the “D?” command at 60 seconds intervals. (If the sensor is set to automatically output data then the sensor will output data every 60 seconds).

Step 6: Wait for the fifth (5th) data message from the sensor. Send the command “BT?” Check that the response is between 0.00 and 0.05.

Step 7: Remove the foam plugs.

EXCO gain Check:

Step 8: Send the command “RST” to restart the sensor. Verify the response is “OK”.

Step 9: If the sensor is operating in the polled mode, send “D?” command at 60 seconds intervals. (If the sensor is set to automatically output data then the sensor will output data every 60 seconds).

Step 10: Wait for the fifth (5th) data message from the sensor. Send the command “BT?” Check that the response is within ± 5% of the Forward EXCO value assigned to the calibration reference plaque (the value on the label attached to the plaque).

Step 11: Remove the calibration reference plaque from the sensor, dismantle it and return it to its protective case for storage.

If the results of the calibration check have agreed with the value on the label attached to the calibration reference plaque within the above limits, re-calibration is NOT required.

A re-calibration is required ONLY if the EXCO values are outside those on the calibration reference plaque AND the calibration check has been carried out ACCORDING TO THE CALIBRATION CHECK NOTES on page 48.

5.2 Sensor Re-calibration

RE-CALIBRATING THE EXTINCTION COEFFICIENT SHOULD ONLY BE CARRIED OUT IF THE SENSOR HAS FAILED A CORRECTLY PERFORMED USER CALIBRATION CHECK

WARNING

ERRORS DURING THIS RE- CALIBRATION PROCEDURE WILL CAUSE THE SENSOR TO GIVE INCORRECT DATA

BEFORE CONTINUING ENSURE THAT THE SENSOR:

1. **IS MOUNTED OUTSIDE AND THAT VISIBILITY IS GREATER THAN 10KM**
2. **HAS BEEN IN CONTINUOUS OPERATION FOR AT LEAST 1 HOUR**
3. **WINDOWS ARE CLEAN**
4. **IS NOT LOCATED NEAR A WALL OR OTHER OBSTRUCTION**
5. **IS NOT RECEIVING OPTICAL REFLECTIONS (from surfaces or clothing)**

Note: All commands should be terminated with <Carriage Return> and <Line Feed> <crlf>, (see Paragraph 1.3).

Step 1. Set up the sensor with the calibration reference plaque in place - see previous section, paragraph 5.1 (power to the sensor need not be removed).

Step 2. Send command “CO”. Sensor replies: OK.

Step 3. Send command: “CE”. Sensor replies:

CLEAN WINDOWS,
BLOCK FWD SCAT RCVR OPTICS,
BLOCK TRANSMITTER OPTICS,
INSTALL REF STD,
ENTER FWD SCAT EXCO (/KM)
FORM: XXX.XX

Step 4. Ensure that the windows are clean. Fit the two foam plugs (supplied with the calibration kit) against the windows.

Step 5. Enter Forward scatter EXCO value as written on the calibration plaque.

Step 6. Sensor Replies: CAL IN PROGRESS
Wait for approximately 2 minutes.
Sensor replies:

REMOVE OPTICS BLOCKS,
ENTER "OK".

Step 7. Remove foam plugs from all windows and send text:” OK”.
Sensor replies: CAL CONTINUES.

Step 8. Wait for approximately 2 minutes.
Sensor replies:

CAL COMPLETE
REMOVE REF STD.

Note: Do not remove the calibration reference plaque at this point.

Step 9. Wait for the third data message to be received at the PC.

Step 11. Note the 'Total EXCO' value reported by the sensor.

Step 12. If the Total EXCO reported is within 3% of the Forward EXCO value of the calibration plaque then the sensor is within its calibration limits. The sensor can be returned to its operational configuration with confidence.

Step 13. Remove the calibration reference plaque assembly from the sensor, dismantle it and return it to its protective case for storage.

6 PRODUCT OVERVIEW

6.1 VPF500 Series of Present Weather Sensors

6.1.1 Available Sensor Models

There is currently one model in the VPF500 series of present weather sensors, the VPF510. It uses the same basic opto-mechanical and electronic components as all other HSS sensors. It has a transmitter head and a forward scatter receiver head.

In common with other HSS sensors, it has the HSS time-proven software for measuring visibility and performing remote self-test diagnostics.

The measurement capabilities of this model is as follows:

Sensor Model	Capability
VPF510	Visibility Digital output Analogue output Relay outputs – programmable for visibility

6.1.2 Instrument Components

Each sensor has been engineered and manufactured with high-reliability components to provide accurate measurements under all weather conditions. Its rugged anodised, salt-brazed aluminium construction is intended to serve you in the severest of environmental conditions throughout the long life of the instrument.

A VPF500 series sensor system consists of the major components listed below:

Item	QUANTITY
Basic Sensor assembly incorporating: transmitter, receiver and electronics housing.	1
Stainless steel mounting U-bolt kit for fixing to a pole.	1

Cable Assemblies.	4 Off
Operation and Maintenance Manual.	1

6.1.3 Optional Items

Hood Heaters

Heaters for the transmitter and receiver hoods. These are to minimise any build-up of ice within the optical paths. They consist of 15W heaters per hood on all versions.

Customer Specified Cable Lengths

The data and power cables can be supplied at any length (up to 25m), as specified by the customer.

Note: For RS232 data configuration, cable lengths above 6m will not work reliably at high baud rates. It is strongly recommended that baud rates no higher than 4800 are used for cable lengths up to 25m.

6.1.4 Accessories

Calibration Kit

The calibration kit, containing a reference standard calibration plaque in a protective carrying case, is employed only at those times that the instrument calibration is being checked.

Transit Case

A rigid re-usable transit case designed to provide full protection to the instrument for regular shipping is available.

6.2 Sensor Features

The VPF510 sensor is a visibility sensor. This sensor has the necessary optimum configuration for accurate measurement of visibility in the densest of fogs to very clear air conditions.
In addition to its optimal and unique measurement capabilities, the VPF500 sensors have a number of distinctive physical features:

Compactness:

Each sensor is a single package, small in size and weight. It can be readily installed by one person and can be used in portable or fixed installations.

Proven Software:

The basic software incorporated into the sensor has evolved over a long period of time and has been tested and proven in hundreds of sensors.

Ease of Maintenance and Calibration:

Routine maintenance, including a check on calibrations, is performed in a matter of a few minutes. A re-calibration if required takes only slightly longer and is easily performed by one person.

6.2.1 Real Time Data Displays

The output of the sensor is provided both as a serial digital message at a sample time interval selected by the operator (a typical sample time interval is one minute) and as a real time analogue output. The digital message is provided automatically, or if the sensor is in the polled mode the data message is transmitted after the polling command is sent to the sensor.
A printer can be used to record the data message. However, a PC terminal offers much more flexibility:

1. Each message can be time-tagged with the date and time.

2. Data processing can occur, such as the application of Allard's Law for visibility of point light sources.

3. All or selected parts of the data message can be archived.

6.2.2 Overview

These sensors utilise microprocessor technology to perform automatic visibility measurements. Both DC versions and mains driven versions of the sensor are available.

6.2.3 Visibility Related Measurements

The measurement capabilities of the sensor are summarised in the table below. Determination of visual range is based on measurements of the atmospheric extinction coefficient (EXCO). Note that EXCO includes the attenuating effects of both suspended particles and precipitating particles. Meteorological optical range (MOR) is determined by application of the standard relation:

$$MOR = 3.00/EXCO$$

Visibility Measurements

Function	Details
Meteorological Optical Range.	10 metres to 75km (30 feet to 46 miles)
Atmospheric Extinction Coefficient (EXCO).	300km^{-1} to 0.04km^{-1}
Accuracy.	± 2% at 2 km ± 10% at 16 km ± 20% 16 to 30 km

Table 6-1 - Measurement Capabilities of the VPF500 Series of Sensors

6.3 Sensor Specifications

The specifications for the VPF500 series of sensors are summarised in the following pages.

Atmospheric Extinction Coefficient (EXCO) Measurements

Function	Details
Meteorological Optical Range (MOR).	10m to 75km
Measures:	Atmospheric Extinction Coefficient (EXCO),
Measurement Accuracy at 16 km.	± 10%
Measurement Accuracy at 2 km.	± 2%
Measurement Time Constant.	30 seconds

Stability of EXCO Zero Setting

Function	Details
Ambient Temperature Effects.	<= 0.02/km
Long Term Drift.	<= 0.02/km

Maintenance

Function	Details
MTBF (Calculated).	52,500 hrs (6 years)
Calibration Check.	6 months recommended
Clean Windows.	3 months recommended, dependent on environment
Remote Self-Test Monitoring.	Included

6.3.1 Instrument Characteristics

Physical

Function	Details
Scattering Angle Coverage.	39° to 51°
Sample Volume.	400 cm^3
Weight.	Around 9Kg including cables
Length.	0.75 m
Depth.	0.26 m
Height.	0.52 m

Light Source

Function	Details
Type.	IRED
Central Wavelength.	0.85µm
Bandwidth.	0.03µm
Lifetime.	>10 years
Modulation Frequency.	2000 Hz

Detector

Function	Details
Type (Photovoltaic).	Silicon
Response.	Silicon
Filter Bandwidth.	0.08µm at 0.88µm

Power Requirements

Function	Details
Supply Voltage.	12 or 24 V DC
Supply Voltage Option.	120 or 240V AC 50 or 60 Hz
Basic Sensor Power Rating.	6.0 W
De-Icing Heaters (Optional).	30 W

Environmental

Function	Details
Operating Temperature Range.	-50°C to +60°C
Altitude.	0 to 20,000 ft
Precipitation.	All weather
Humidity.	0 to 100%
Protection Rating.	IP66
CE Certified.	√
EMC Compliant.	EN61326-1997,1998.2001
RoHS and WEE Compliance.	√

Table 6-2 - Instrument Characteristics

6.3.2 Digital Communication Interface

Communication Protocols

Function	Details
Interface Type.	RS232C, (Full Duplex)
Optional.	RS422 or RS485

Communication Parameters:

Function	Details
Baud Rates.	1200 Baud to 57K6 Baud, user selectable
Data Bits.	8
Parity.	None
Stop Bits.	1
Flow Control.	None
Message Termination.	CR-LF
Message Check Sum:	Selectable

Function	Details
Reporting Interval.	Programmable (Response to poll, or Automatic at programmable intervals: e.g., 30 seconds to several minutes; 1 minute typical)
Message Content:	• Instrument Identification Number (Programmable) • Reporting Interval (seconds) • Meteorological Optical Range (Kilometres) • Extinction Co-efficient • Remote Self-Test & Monitoring Flags • Date and time tags

Table 6-3 - Digital Communication Interface Specifications

6.3.3 Sensor Remote Self-Test Capabilities

Standard Self-Test and Monitoring

- Optical Source Power
- Transmitter Window Contamination
- Power Supply Voltages
- Non-Volatile Memory Check Sum Test
- EPROM Check-Sum Test
- Restart Occurrence
- Sensor Sample Interrupt Verification
- RAM Read/Write Verification
- Register Read/Write Verification
- A/D Control Signal Test
- A/D Conversion Accuracy Check
- Input Voltage Check (Battery Check on DC Powered Sensors Only)
- Forward-Scatter Background Illumination Level

Advanced Self-Test and Monitoring

- Optical Source Power
- Forward-Scatter Receiver Sensitivity
- Transmitter Window Contamination
- Forward-Scatter Receiver Window Contamination
- Power Supply Voltages
- Non-Volatile Memory Check Sum Test
- EPROM Check-Sum Test
- Restart Occurrence

- Sensor Sample Interrupt Verification
- RAM Read/Write Verification
- Register Read/Write Verification
- A/D Control Signal Test
- A/D Conversion Accuracy Check
- Input Voltage Check (Battery Check on DC Powered Sensors Only)
- Forward-Scatter Background Illumination Level

Standard Self-Test and Monitoring is a Standard Feature on the VPF500 Series of sensors.

Advanced Self-Test and Monitoring is an Optional Accessory on the VPF500 Series of sensors.

.

6.4 VPF500 Series of Sensors - Dimensions

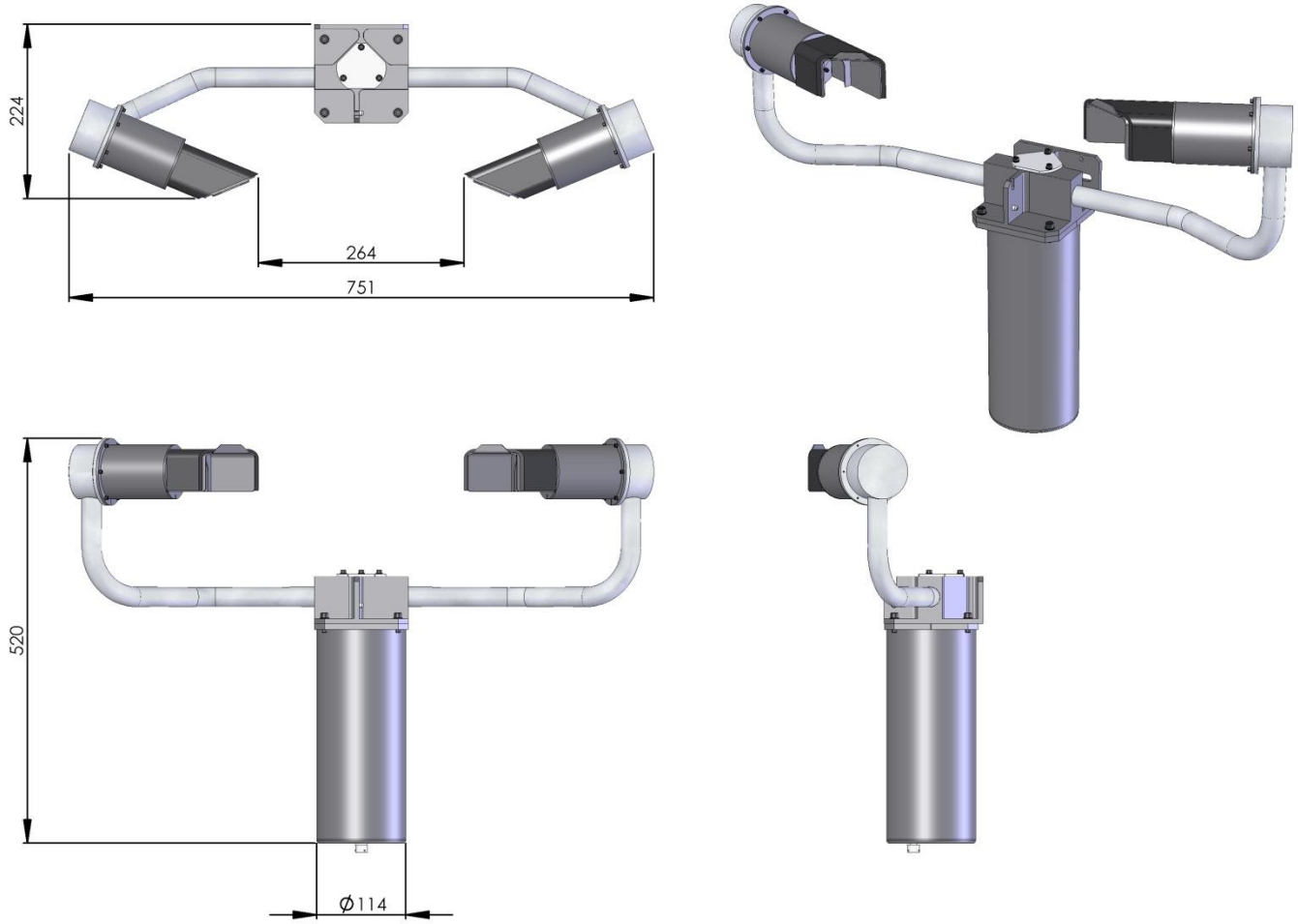

Figure 6-1 - VPF510 Model Dimensions (mm)

7 INDEX

A

ACCESSORIES 53
Calibration Kit 53
Transit Case 53
AFTER SALES SUPPORT VI
ANALOGUE DATA CONFIGURATION 25
Exco Ranges 26
MOR Ranges 26
MOR/Exco Selection 25
ANALOGUE DATA CONNECTIONS 6

B

BAUD RATE 8, 17, 31
BIRAL SENSOR INTERFACE SOFTWARE 1, 8, 31, 43, 45, 47

C

CABLES 4
Analogue Data 6
Cable Length 4
Digital Data 5
Power 4
Relay Connections 6
CALIBRATION 47
Calibration Certificate 7
Calibration Check 47
Calibration Kit 3, 53
Calibration Kit Assembly 48
Re-calibration 50
CE CERTIFICATION - SAFETY VII
CHECK DATA MESSAGE 9
CHECKSUM 40
LRC (RS485 only) 19, 20–21, 22
Normal (not RS485) 17–19
COMMANDS AND RESPONSES 37
Sensor Commands 37
Sensor Responses 41
COMMUNICATIONS CONFIGURATION 19
CONFIGURATION OPTIONS 10
Baudrate 17

Checksum 17
Defaults 13
Relays 22
RS485 19
CONTACT DETAILS VI

D

DATA MESSAGES 34
VF510 35
DATE AND TIME STAMP 15
DIGITAL DATA CONFIGURATION 25
MOR/Exco Selection 25
DIGITAL DATA CONNECTIONS 5
DIMENSIONS OF SENSOR 61

E

ELECTRICAL CONNECTIONS 4
ENVIRONMENTAL SPECIFICATION 58
EQUIPMENT TEST 7
EXCO CALIBRATION CHECK 45
EXCO RE-CALIBRATION 50

H

HEATERS 42
Hood Heaters 43, 53
Changing Defaults 14
Commands 37
Configuration 13
State and Error Flags 40
Window heaters (de-misters) 42

I

IDENTIFICATION NUMBER 37
INSTALLATION 27
Electrical Grounding 30
Height Above Ground 28
Mounting 29
Orientation 28
Siting Considerations 27
IP RATING 58

M

MAINTENANCE PROCEDURES 42–47
General Checks 42
Hood Heaters 43
Window Cleaning 43
Window Heaters 42
Self-Test Codes 43
User Confidence Checks 45
EXCO Calibration Check 45
Receiver Background Brightness 46
Window Monitor Checka 45
METEOROLOGICAL OPTICAL RANGE 50, 54
MOUNTING THE SENSOR 29

O

OPTIONAL ACCESSORIES 3, 53
Transit Case 3
ORIENTATION ..... *SEE* INSTALLATION

P

POWER CONNECTIONS 4
PRODUCT OVERVIEW 52

R

RELAY CONNECTIONS 6
RELAYS 22
Delays and Hysteresis 23
Threshold levels 23
REMOTE SELF-TEST & MONITORING 52
Check 32
Data Message 8, 32
RESPONSES FROM SENSOR 41
To Command R? 40
To Command T? 41
RS232 ..... 5, 8, 31
RS422 ..... 6, 8, 19, 31, 58
RS485 ..... 6, 8, 17, 31, 37, 58
Configuration Settings 19–22

S

SELF-TEST & MONITORING ..... *SEE* REMOTE SELF-TEST & MONITORING
SELF-TEST CODES 43
SENSOR COMMANDS 37
SENSOR CONNECTIONS 4
SENSOR DIMENSIONS 61
SENSOR FEATURES 53
SENSOR RESPONSES 41
SENSOR SPECIFICATIONS 55–61
SIGNAL CONNECTIONS 5

T

TEST AND COMMISSIONING 7, 31
TIME STAMP 15
TRANSIT CASE 3
TROUBLESHOOTING 31
- Calibration Check 33
- Checking Data link 31
- Checking Power Supply 31
- Remote Self-Test Check 32
- Self-Test Codes 43
- Sensor Responses 41
- Sensor Self-Test Capabilities 59

V

VF510 DATA MESSAGES 35

W

WARRANTY ..... VII, 31
WINDOW CLEANING 43
WINDOW CONTAMINATION MONITORING 23
WINDOW HEATERS (DE-MISTERS) 42

8 NOTES: